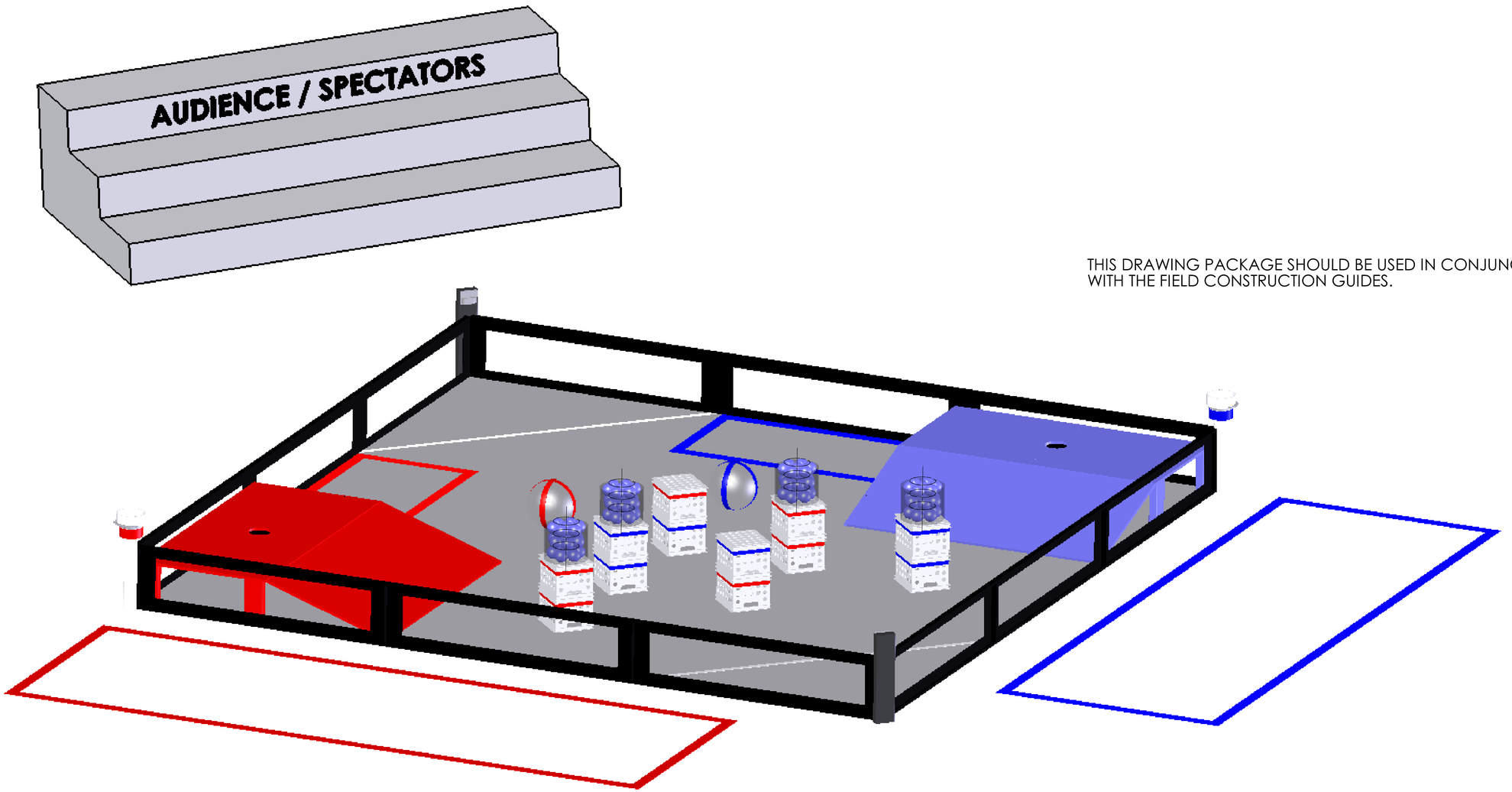

THIS DRAWING PACKAGE SHOULD BE USED IN CONJUNCTION WITH THE FIELD CONSTRUCTION GUIDES.

	NAME	DATE
DRAWN	PMR	7-2011
CHECKED		
ENG APPR.		
MFG APPR.		
Q.A.		
COMMENTS:		

FIRST
200 Bedford Street, Manchester, N. H.03101
(603) 666-3906 - FAX (603) 666-3907

TITLE:
Bowled Over Field Construction Drawing

SIZE	DWG. NO.	REV
D	FTC1201-1	-

SCALE: | SHEET 1 OF 13

ITEM NO.	DESCRIPTION	NOTES	QTY.
A-3-R	2" RED GAFFERS TAPE		AR
A-3-B	2" BLUE GAFFERS TAPE		AR
A-3-W	1" WHITE GAFFERS TAPE		AR

NOTES
1. Dimensions are approximate. Align tape on inside edge of foam teeth.
2. Place item A-3-W corner to corner as shown.
3. Place tiles smooth side up.
4. General Note: Tape may be "dotted" or "dashed" to avoid taping over the seams of the tiles.

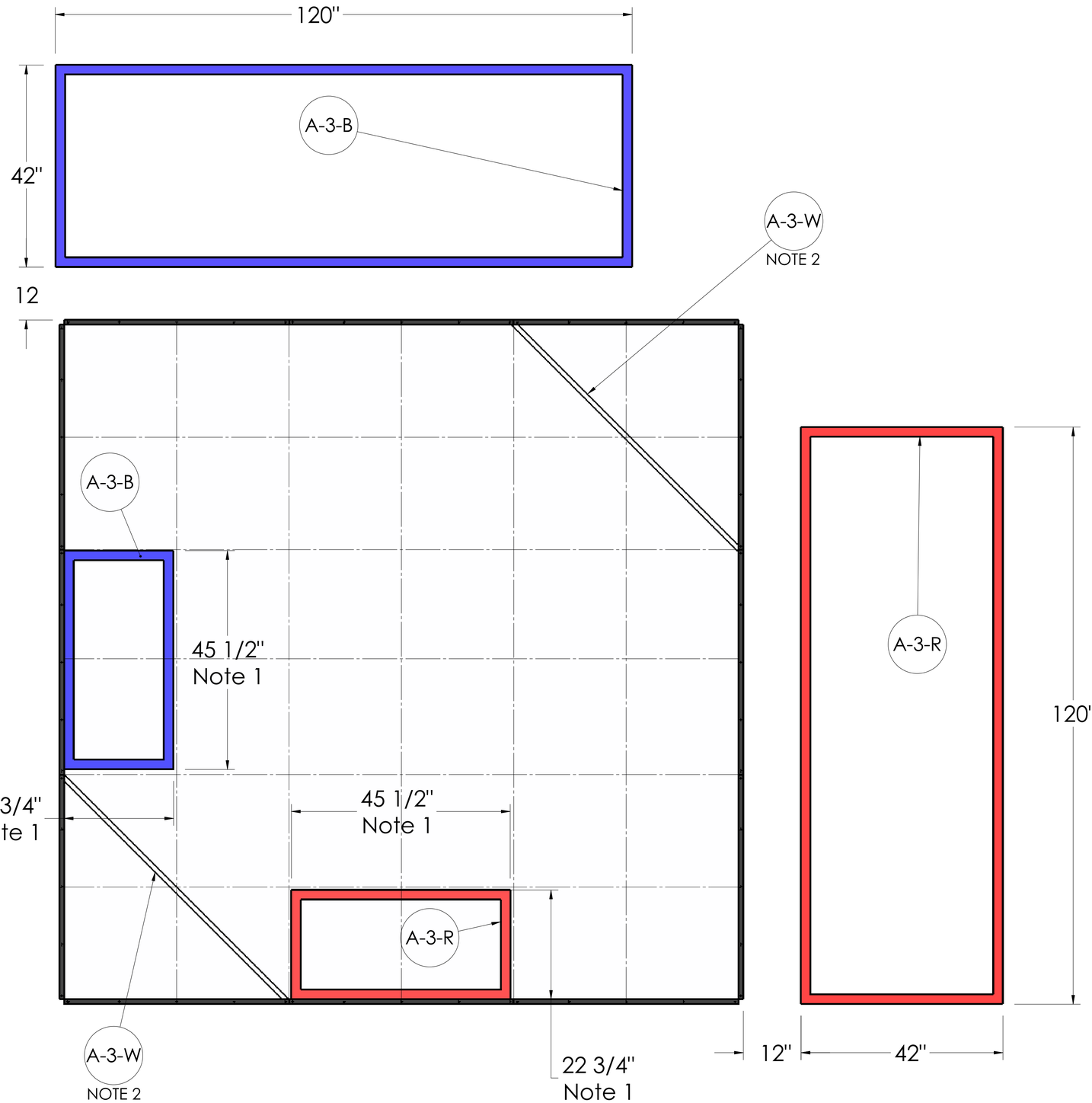

	NAME	DATE
DRAWN	PMR	7-2011
CHECKED		
ENG APPR.		
MFG APPR.		
Q.A.		
COMMENTS:		

FIRST
200 Bedford Street, Manchester, N. H.03101
(603) 666-3906 - FAX (603) 666-3907

TITLE: FIELD TAPE LAYOUT

SIZE D | DWG. NO. FTC1201-1 | REV -

SCALE: | SHEET 2 OF 13

ITEM NO.	DESCRIPTION	NOTES	QTY.
A-1	SOFT TILES		36
A-2	FIELD PERIMETER		ASSY
B-B	HOME ZONE - BLUE	SEE SHEET 5	1
B-R	HOME ZONE - RED	SEE SHEET 6	1
C-B	OFF FIELD GOAL - BLUE	SEE SHEET 8	1
C-R	OFF FIELD GOAL - RED	SEE SHEET 8	1
D	IR BEACON - MASTER	SEE SHEET 9	1
D-S	IR BEACON - SLAVE	SEE SHHET 9	1
E	BALL TUBE	SEE SHEET 10	4
F-B	STERILITE® MINI CRATES - BLUE	SEE SHEET 11	6
F-R	STERILITE® MINI CRATES - RED	SEE SHEET 11	6
G-B	BLUE BOWLING BALL	SEE SHEET 12	1
G-R	RED BOWLING BALL	SEE SHEET 12	1
H	RAQUET BALL		88
H-M	MAGNET RAQUET BALL		12
I	SCORING STICK	SEE SHEET 13	2

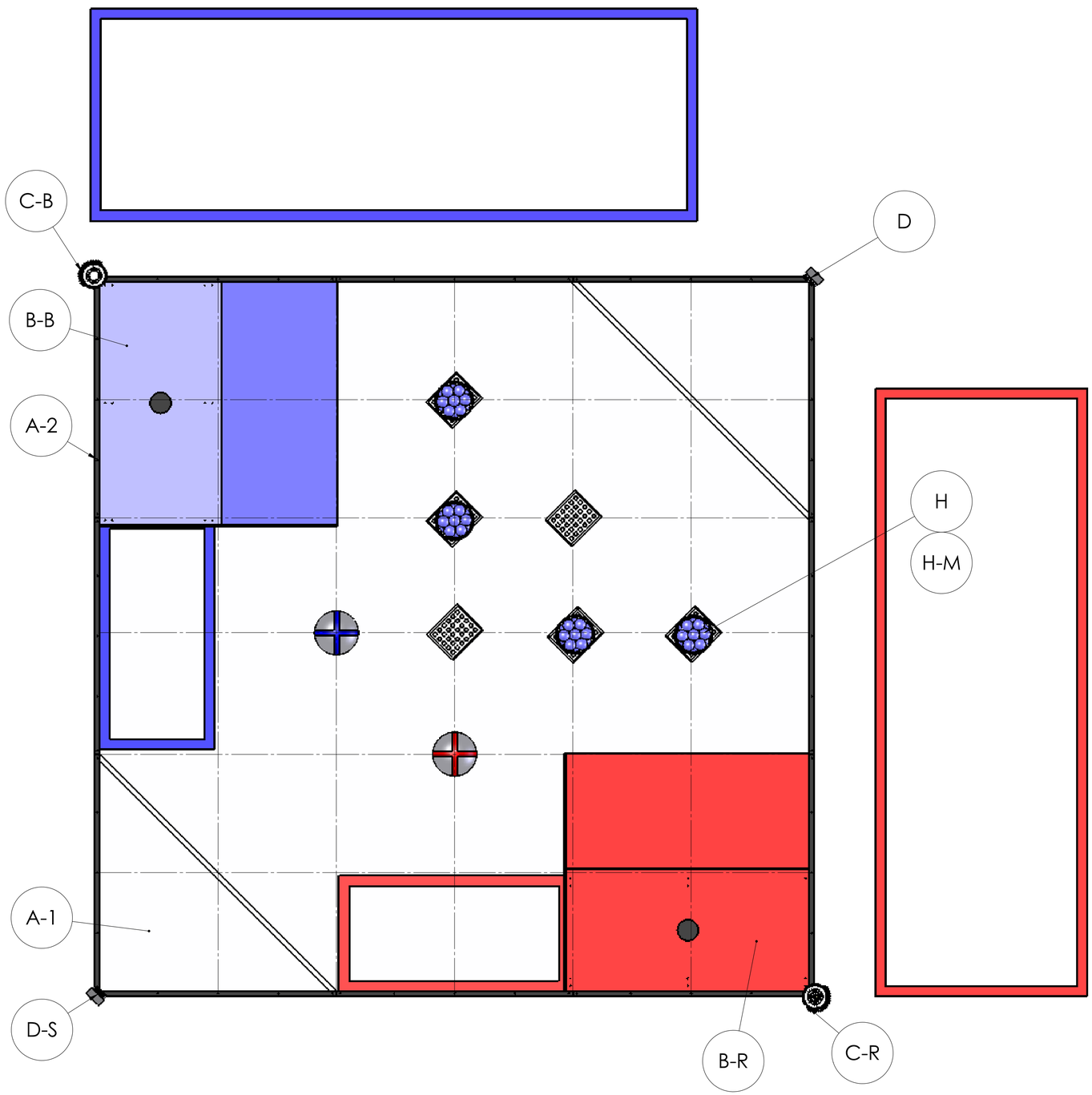

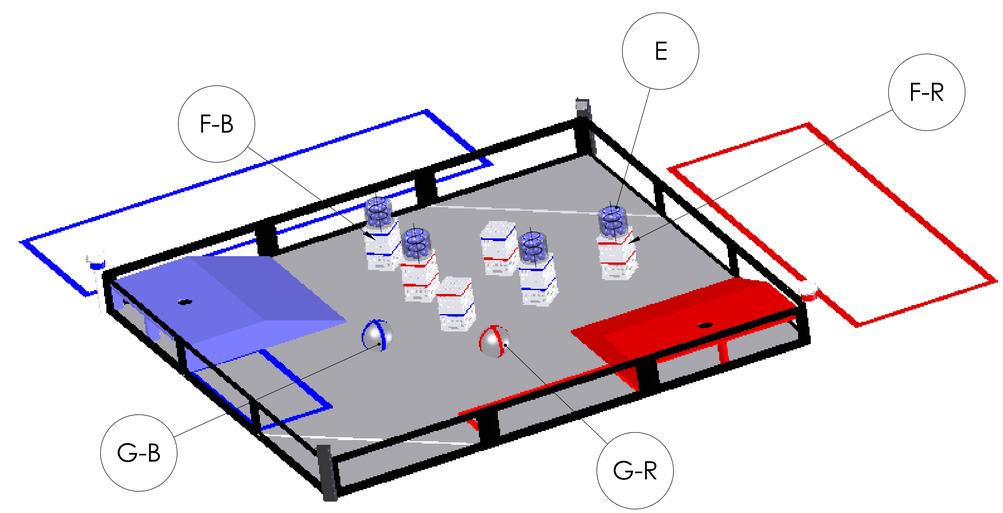

	NAME	DATE
DRAWN	PMR	7-2011
CHECKED		
ENG APPR.		
MFG APPR.		
Q.A.		

COMMENTS:

FIRST
200 Bedford Street, Manchester, N. H 03101
(603) 666-3906 - FAX (603) 666-3907

TITLE: FIELD COMPONENT LAYOUT

SIZE D | DWG. NO. FTC1201-1 | REV -

SCALE: | SHEET 3 OF 13

ITEM NO.	DESCRIPTION	NOTES	QTY.
B-1	1/2" PLYWOOD	1 PER ASSEMBLY	2
B-2	2X4	6 PER ASSEMBLY	12
B-1-R	1/2" PLYWOOD	1 PER ASSEMBLY	2
B-3	1/4" LAUN	1 PER ASSEMBLY'	2

NOTES:
1. THESE DIMENSIONS MAY BE ADJUSTED TO CENTER THE HOLES ON THE 2x4 (B-2).

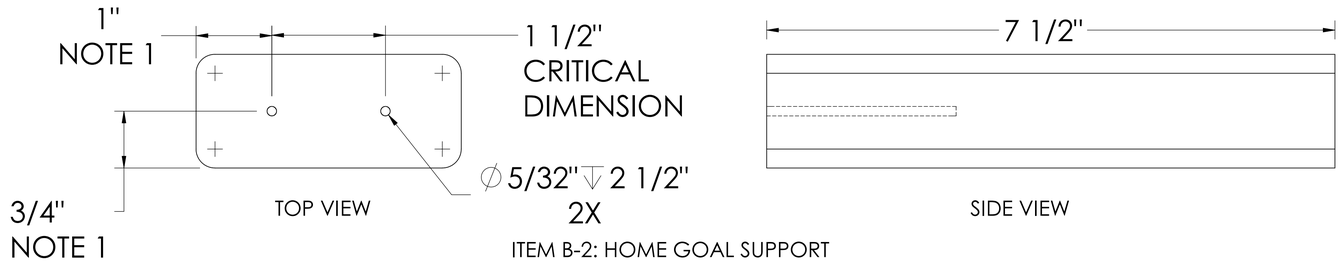

ITEM B-2: HOME GOAL SUPPORT

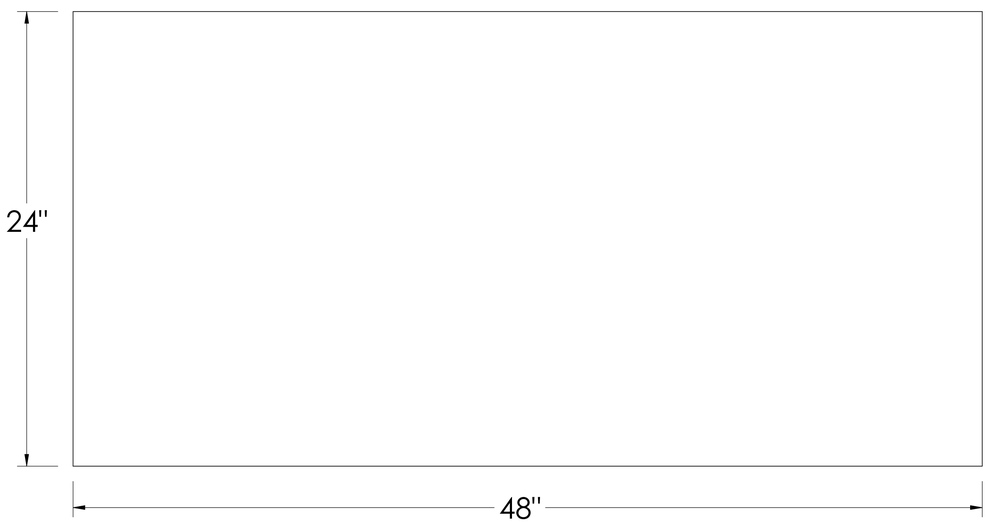

ITEM B-1-R: RAMP

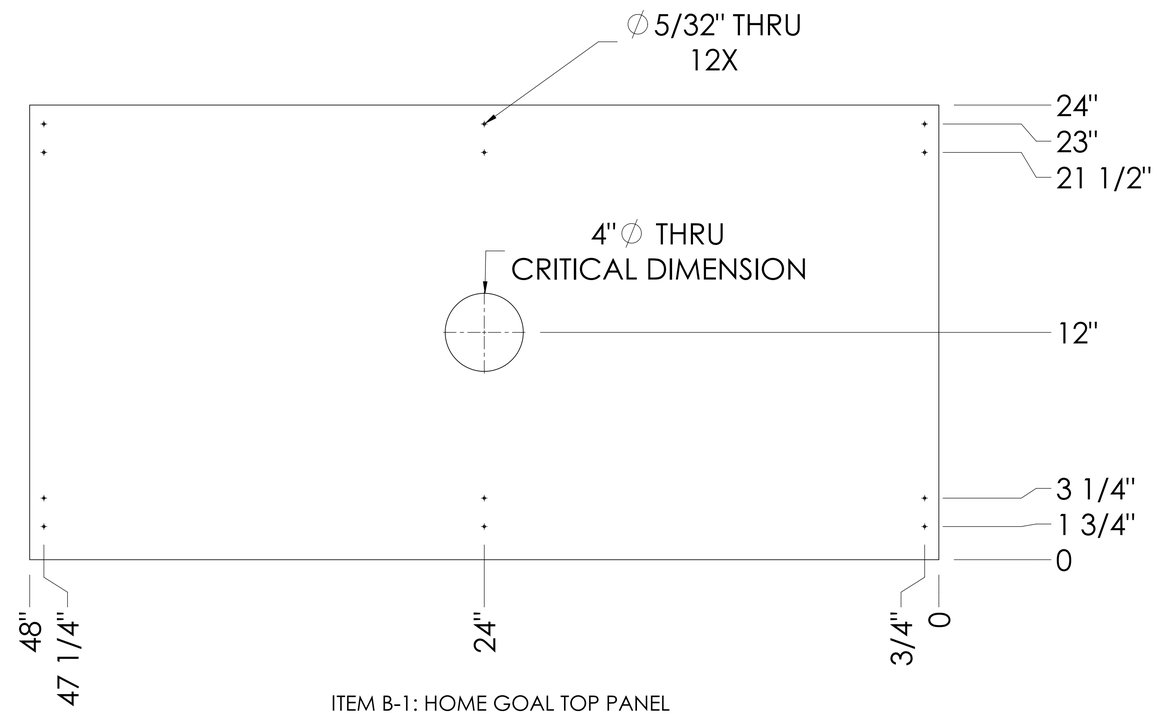

ITEM B-1: HOME GOAL TOP PANEL

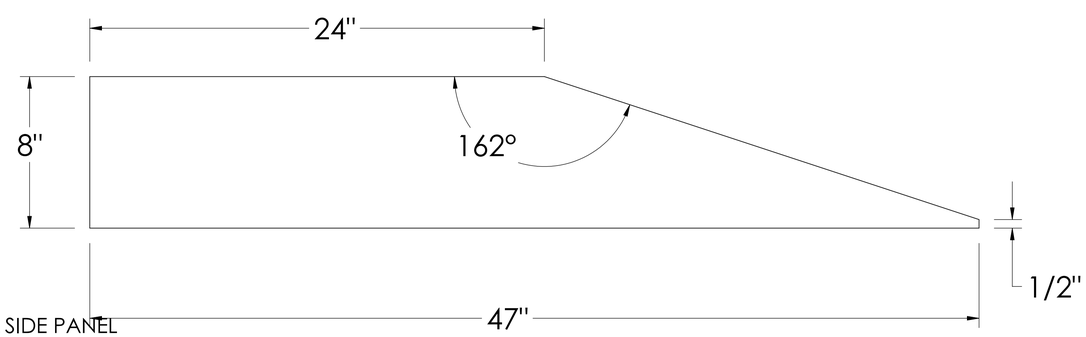

ITEM B-3: HOME GOAL SIDE PANEL

	NAME	DATE
DRAWN	PMR	7-2011
CHECKED		
ENG APPR.		
MFG APPR.		
Q.A.		

COMMENTS:

FIRST
200 Bedford Street, Manchester, N. H.03101
(603) 666-3906 - FAX (603) 666-3907

TITLE: B: HOME ZONE PARTS

SIZE D | DWG. NO. FTC1201-1 | REV -

SCALE: | SHEET 4 OF 13

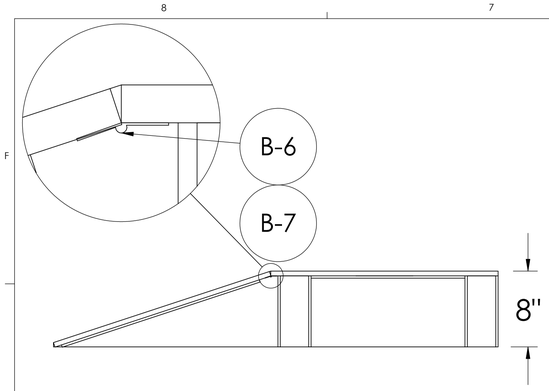

SIDE VIEW

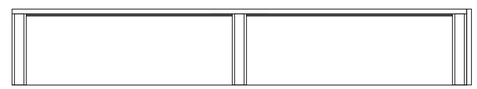

BACK VIEW

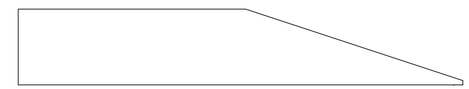

SIDE VIEW

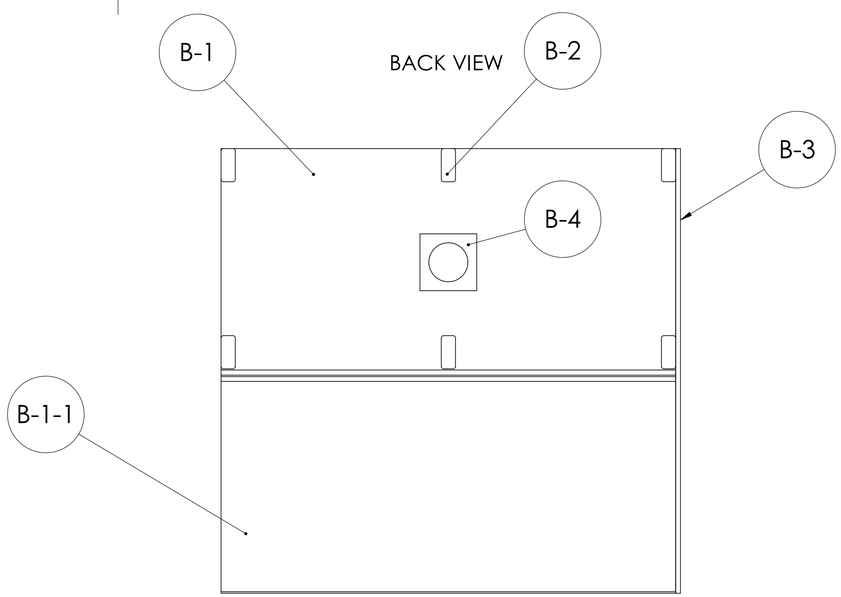

BOTTOM VIEW

ITEM NO.	DESCRIPTION	NOTES	QTY.
B-1	1/2" PLYWOOD - TOP PANEL		1
B-1-1	1/2" PLYWOOD - RAMP		1
B-2	2X4		6
B-3	1/4" LUAN - SIDE PANEL		1
B-4	6x6 SCREEN	ATTACH USING HEAVY DUTY STAPLES	1
B-5	#8 - 2-1/2" WOOD SCREW		12
B-6	PIANO HINGE - 1-1/2" X 48"		1
B-7	#6 - 3/8" WOOD SCREW	FOR USE WITH ITEM B-6 IF SUPPLIED SCREWS DO NOT WORK	AR
B-8	3/4" ADHESIVE BACKED VELCRO	22" STRIPS	AR
B-9-B	PAINT - MIDNIGHT BALL BLUE	BEHR PREMIUM PLUS SEMI-GLOSS PAINT	AR

1. PAINT ALL WOOD AND LUAN PARTS WTH B-9-B PRIOR TO ASSEMBLY.
2. CUT ITEM B-2 AS REQUIRED TO ENSURE TOTAL PLATFORM HIEGHT IS 8".

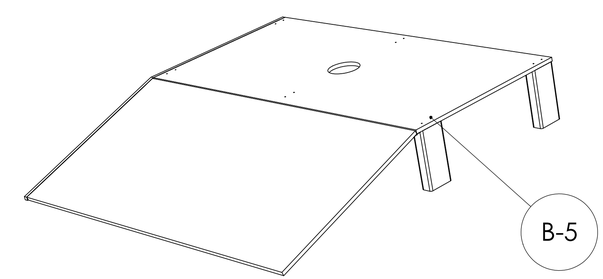

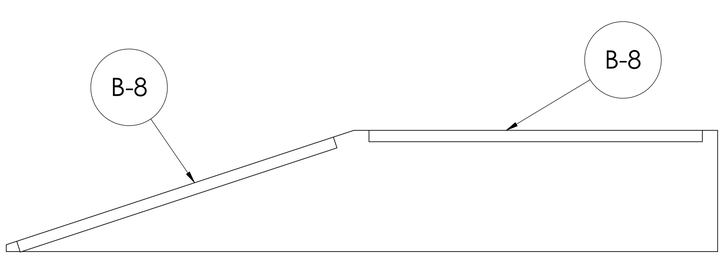

VELCRO ATTACHMENT TO SIDE PANEL

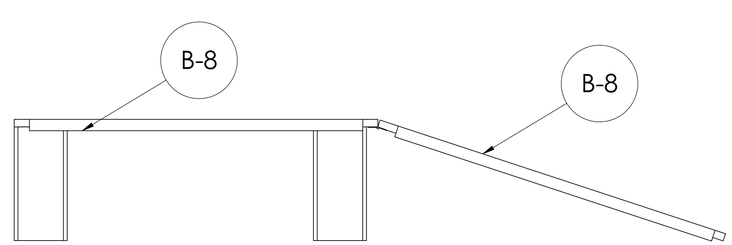

VELCRO ATACHMENT TO HOME ZONE

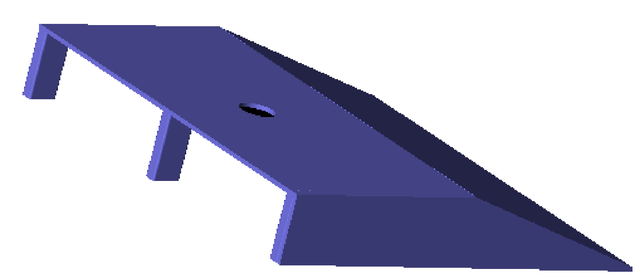

	NAME	DATE
DRAWN	PMR	7-2011
CHECKED		
ENG APPR.		
MFG APPR.		
Q.A.		
COMMENTS:		

FIRST
200 Bedford Street, Manchester, N. H.03101
(603) 666-3906 - FAX (603) 666-3907

TITLE: B: BLUE HOME ZONE

SIZE D | DWG. NO. FTC1201-1 | REV -

SCALE: | SHEET 5 OF 13

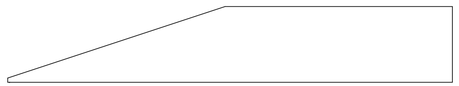

SIDE VIEW

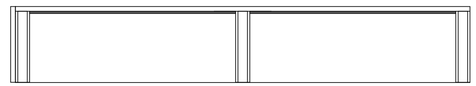

BACK VIEW

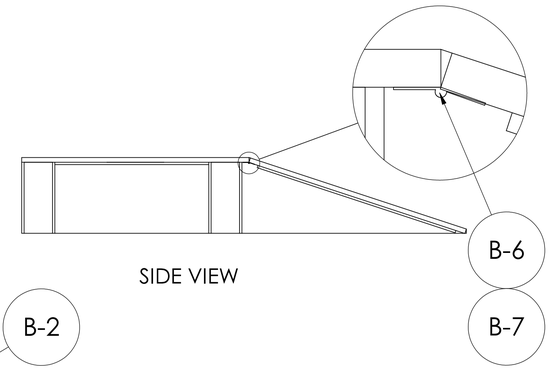

SIDE VIEW

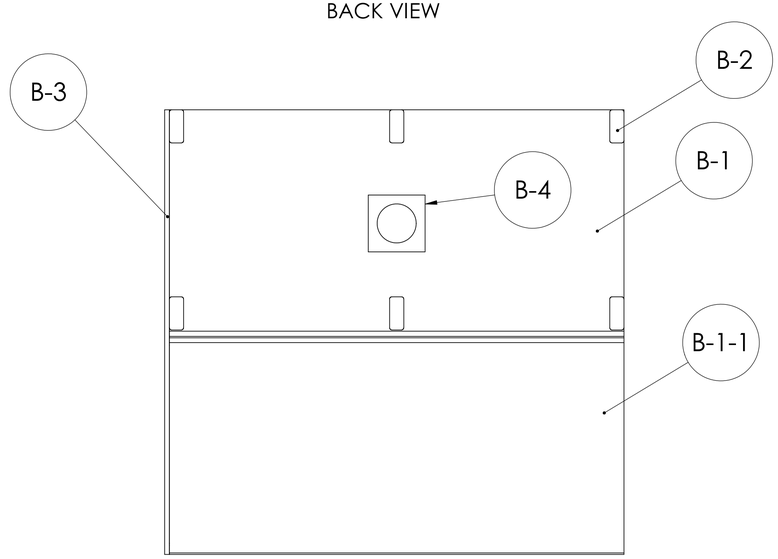

BOTTOM VIEW

ITEM NO.	DESCRIPTION	NOTES	QTY.
B-1	1/2" PLYWOOD - TOP PANEL		1
B-1-1	1/2" PLYWOOD - RAMP		1
B-2	2X4		6
B-3	1/4" LUAN - SIDE PANEL		1
B-4	6x6 SCREEN	ATTACH USING HEAVY DUTY STAPLES	1
B-5	#8 - 2-1/2" WOOD SCREW		12
B-6	PIANO HINGE - 1-1/2" X 48"		1
B-7	#6 - 3/8" WOOD SCREW	FOR USE WITH ITEM B-6 IF SUPPLIED SCREWS DO NOT WORK	AR
B-8	3/4" ADHESIVE BACKED VELCRO	22" STRIPS	AR
B-9-R	PAINT - MICKEY'S PANTS RED	BEHR PREMIUM PLUS SEMI-GLOSS PAINT	AR

1. PAINT ALL WOOD AND LUAN PARTS WTH B-9-R PRIOR TO ASSEMBLY.
2. CUT ITEM B-2 AS REQUIRED TO ENSURE TOTAL PLATFORM HIEGHT IS 8".

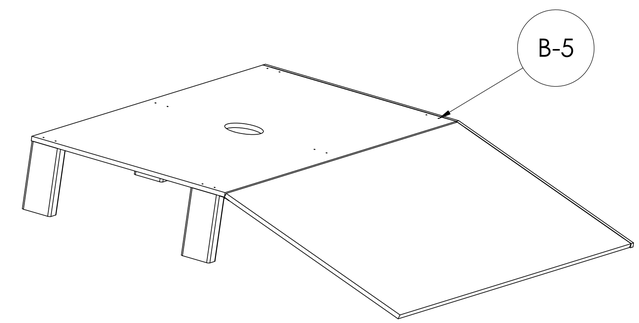

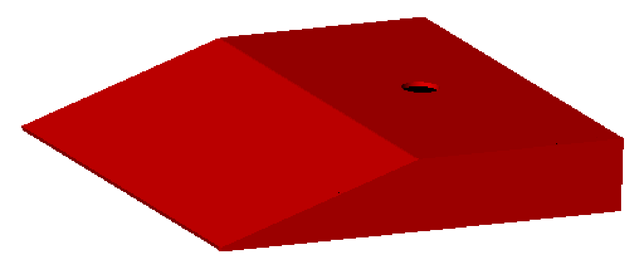

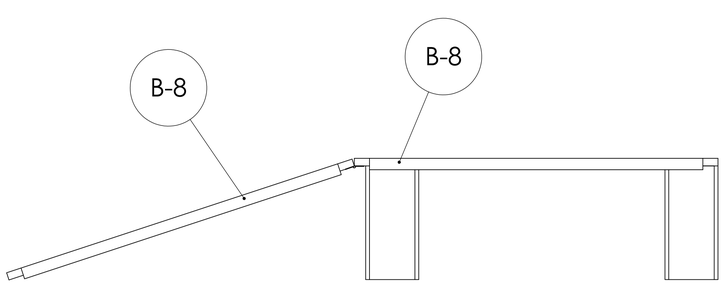

VELCRO ATTACHMENT
TO HOME ZONE

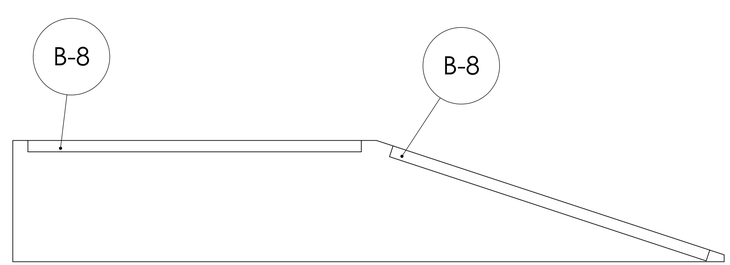

VELCRO ATTACHMENT
TO SIDE PANEL

	NAME	DATE
DRAWN	PMR	8-2011
CHECKED		
ENG APPR.		
MFG APPR.		
Q.A.		

COMMENTS:

FIRST
200 Bedford Street, Manchester, N. H.03101
(603) 666-3906 - FAX (603) 666-3907

TITLE: B: RED HOME ZONE

SIZE	DWG. NO.	REV
D	FTC1201-1	-

SCALE: 1:8 | SHEET 6 OF 13

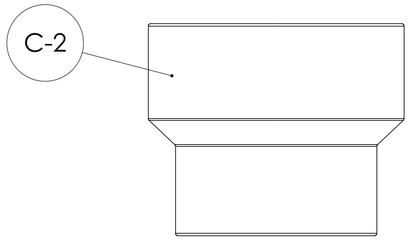

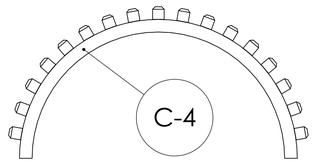

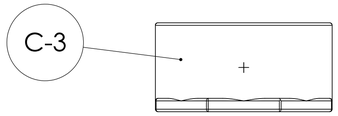

ITEM C-2 AND C-3 MAY BE SUBSTITUTED WITH A SINGE 2" TO 4" PIPE ADAPTER. MAINTIAN CRITICAL ASSEMBLY HIEGHT AS SHOWN ON SHEET 8.

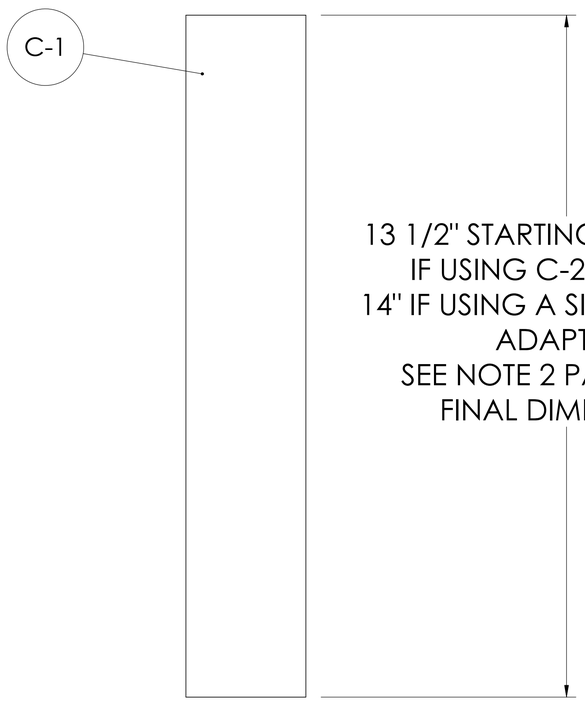

13 1/2" STARTING DIMENSION
IF USING C-2 AND C-3.
14" IF USING A SINGLE 2" TO 4"
ADAPTER.
SEE NOTE 2 PAGE 8 FOR
FINAL DIMENSION.

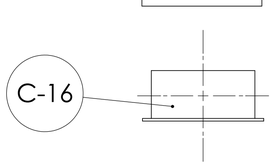

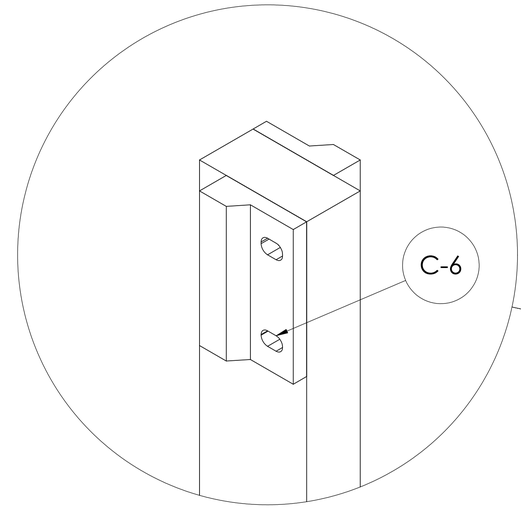

REED SWITCH INSTALLATION
DETAIL

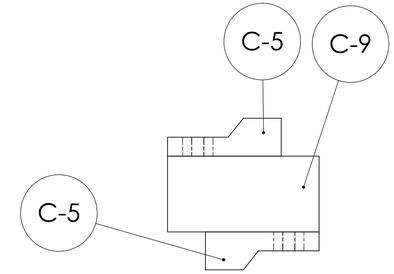

MAGNETIC SENSOR
TOP VIEW

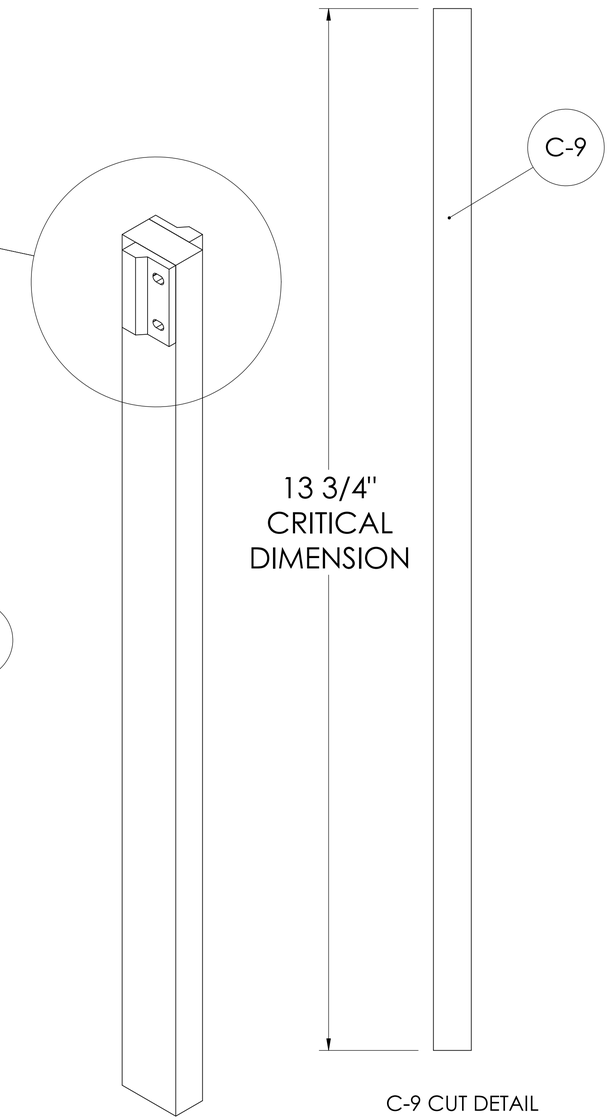

MAGNETIC SWITCH
ASSEMBLY

C-9 CUT DETAIL

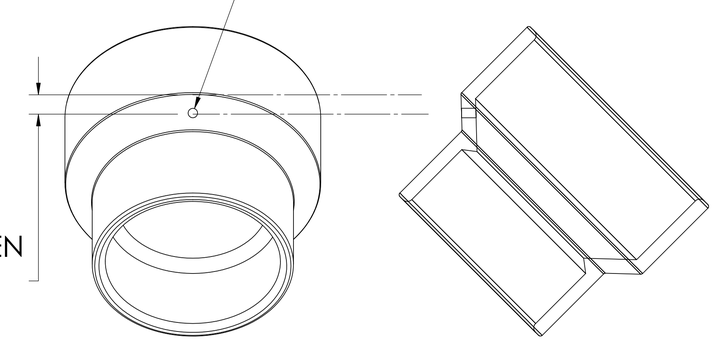

C-1 HOLE DETAILS

SEE SHEET 8 FOR ITEM DESCRIPTION AND NOTES.
SEE CONSTRUCTION GUIDE FOR ATTACHMENT DETAILS.

	NAME	DATE
DRAWN:	PMR	7-2011
CHECKED:		
ENG APPR:		
MFG APPR:		
Q.A.		
COMMENTS:		

FIRST
200 Bedford Street, Manchester, N. H.03101
(603) 666-3906 - FAX (603) 666-3907

TITLE: C: OFF FIELD GOAL DETAILS

SIZE	DWG. NO.	REV
D	FTC1201-1	-
SCALE:		SHEET 7 OF 13

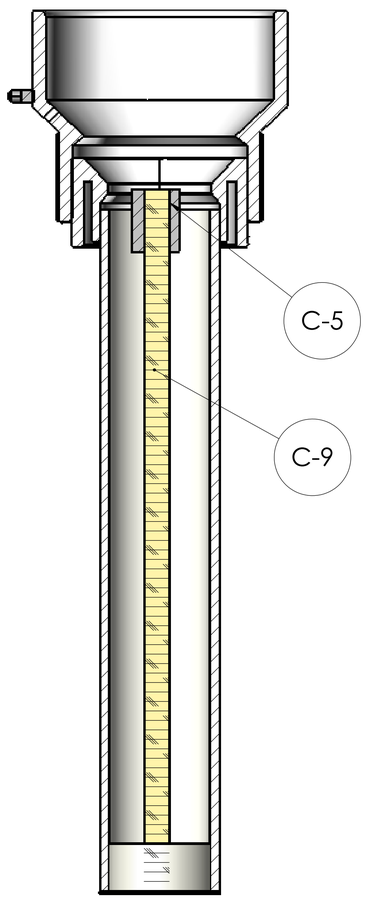

SECTION R-R
SCALE 1 : 1.5
CUT IN HALF VIEW
MAGNETIC SENSOR
INSTALLED

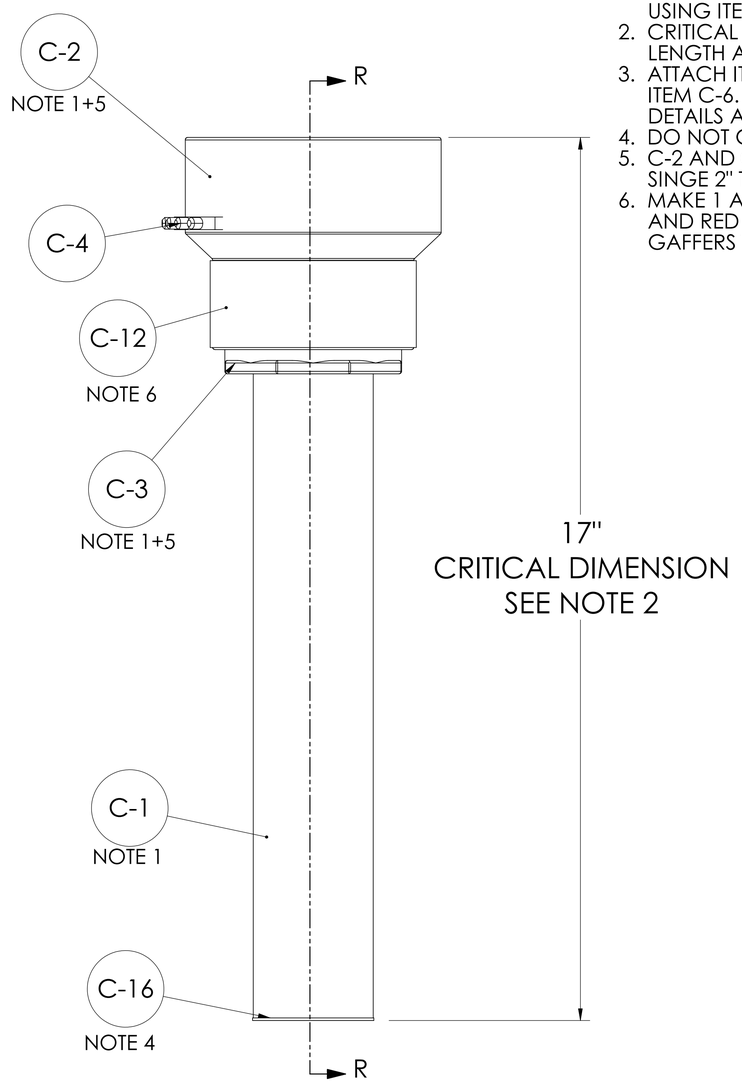

1. GLUE PIECES C-1, C-2, AND C-3 TOGETHER USING ITEM C-10 AND C-11.
2. CRITICAL DIMENSION. CUT ITEM C-3 TO LENGTH AFTER GLUING TOGETHER.
3. ATTACH ITEM C-5 TO C-9 AS SHOWN USING ITEM C-6. SEE CONSTRUCTION GUIDE FOR DETAILS AND MAGNETIC SWITCH ASSEMBLY.
4. DO NOT GLUE TO C-1
5. C-2 AND C-3 MAY BE SUBSTITUTED WITH A SINGE 2" TO 4" ADAPTER.
6. MAKE 1 ASSEMBLY WITH RED GAFFERS TAPE AND RED LEDS AND 1 ASSEMBLY WITH BLUE GAFFERS TAPE AND BLUE LEDS.

ITEM NO.	DESCRIPTION	NOTES	QTY.
C-1	2" PVC Pipe	1 PER ASSEMBLY	AR
C-2	3" - 4" Reducer	PVC 1 PER ASSEMBLY	2
C-3	2" - 3" Reducer	PVC 1 PER ASSEMBLY	2
C-4	9-1/2" String LED Light	BLUE AND RED - ONE PER ASSEMBLY	2
C-5	MAGNETIC REED SWITCH	2 PER ASSY	4
C-6	#6-3/8" Wood Screw	4 PER ASSY	8
C-7	9V Battery Clip	1 PER ASSY	2
C-8	9V Battery	1 PER ASSY	2
C-9	1"X1/2"X13-5/8" Wood Strip	1 PER ASSY	2
C-10	PVC Cleaner		AR
C-11	PVC CEMENT		AR
C-12	2" Gaffers Tape-Blue&Red	SAME AS A-3 - TRIM AS NEEDED	AR
C-13	Electrical Tape		AR
C-14	Wire Nuts	3 PER ASSY	6
C-15	3/4" Sticky Back VELCRO	Same as B-8	AR
C-16	2" PVC Drain	1 PER ASSY	2

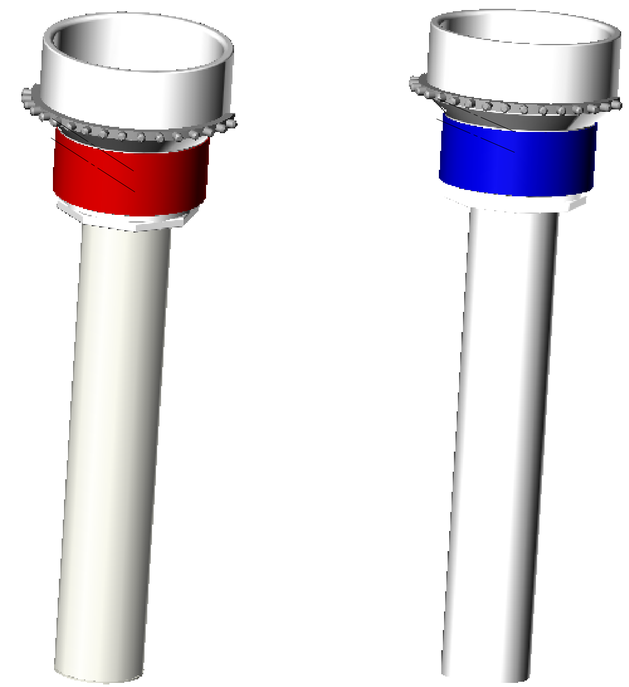

	NAME	DATE
DRAWN	PMR	8-2011
CHECKED		
ENG APPR.		
MFG APPR.		
Q.A.		
COMMENTS:	BOWLED	

FIRST
200 Bedford Street, Manchester, N. H.03101
(603) 666-3906 - FAX (603) 666-3907

TITLE: C: OFF FIELD GOAL ASSEMBLY

SIZE D | DWG. NO. FTC1201-1 | REV -

SCALE: | SHEET 8 OF 13

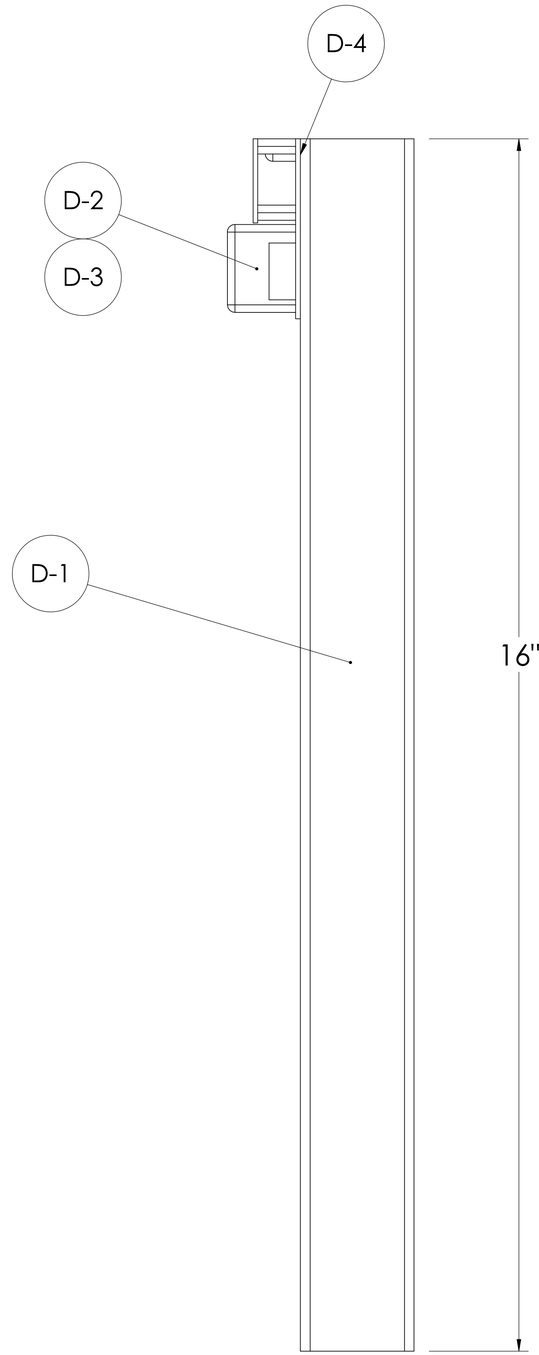

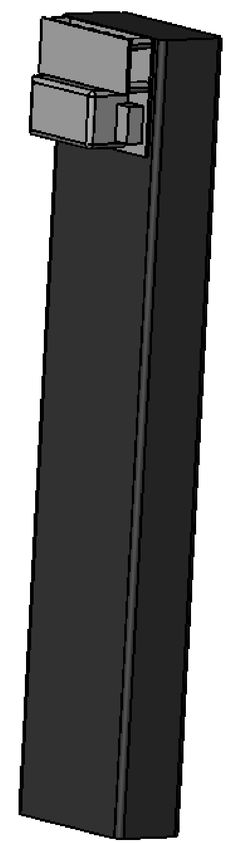

ITEM NO.	DESCRIPTION	NOTES	QTY.
D-1	2"x 4" x 16" Lumber	16" LONG 1 PER ASSEMBLY	2
D-2	Master Beacon	1 PER ASSEMBLY	1
D-3	Slave Beacon	1 PER ASSEMBLY	1
D-4	3/4" Sticky Back VELCRO	APPLY TO ALL SIDES	AR
D-5	Mouse Ears Black	APPLY TO D-1	AR
D-6	9V Battery		1
D-7	Connector Housing - Male .100 3 POS		2
D-8	Crimps		4
D-9	Crimp Tool		1
D-10	24 Gauge Stranded Speaker Wire		AR

NOTES:
1. WIRING PER CONSTRUCTION GUIDE.
2. MAKE ONE MASTER AND ONE SLAVE ASSEMBLY.

	NAME	DATE
DRAWN	PMR	8-2011
CHECKED		
ENG APPR.		
MFG APPR.		
Q.A.		
COMMENTS:		

FIRST
200 Bedford Street, Manchester, N. H.03101
(603) 666-3906 - FAX (603) 666-3907

TITLE:
D: IR BEACON

SIZE D | DWG. NO. FTC1201-1 | REV -

SCALE: | SHEET 9 OF 13

ITEM NO.	DESCRIPTION	NOTES	QTY.
E-1	8" DIAMETER X 6" LENGTH SONOTUBE	4 PER FIELD	4
E-2	10' X 12' WIDE WHITE ADHESIVE SHELF LINER	APPLY TO OUTSIDE OF ITEM E-1	AR
E-3	SHIPPING LABEL - AVERY 5126	1 LOGO PER TUBE	AR

NOTES:
1. WRAP OUTSIDE OF E-1 WITH E-2.
2. PLACE ONE E-3 CENTERED ON E-1.
3. USE SPARE E-3 TO COVER AREAS INSIDE E-1 NOT COVERED BY E-2.

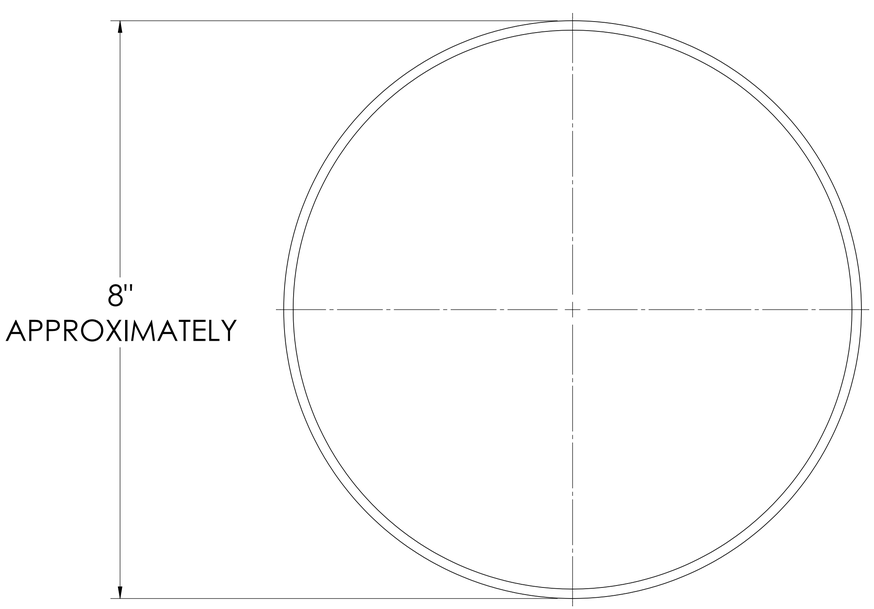

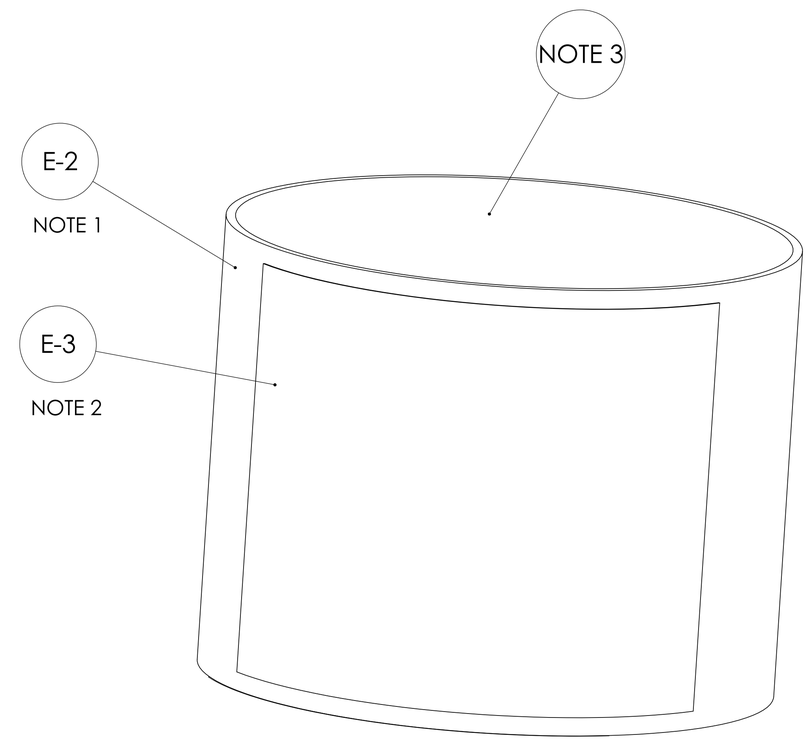

	NAME	DATE
DRAWN	PMR	8-2011
CHECKED		
ENG APPR.		
MFG APPR.		
Q.A.		
COMMENTS:		

FIRST
200 Bedford Street, Manchester, N. H 03101
(603) 666-3906 - FAX (603) 666-3907

TITLE: E: TUBE ASSY

SIZE	DWG. NO.	REV
D	FTC1201-1	-

SCALE: | SHEET 10 OF 13

ITEM NO.	DESCRIPTION	NOTES	QTY.
F-1	STERILITE© MINI CRATE	9" X 7-7/8" X 6-1/8"	12
F-2-B	1" BLUE GAFFER TAPE	6 BLUE CRATES PER FIELD	AR
F-2-R	1" RED GAFFERS TAPE	6 RED CRATES PER FIELD	AR

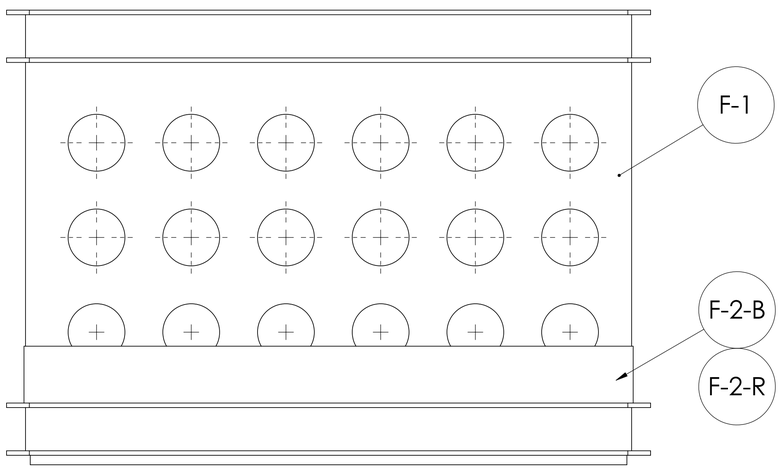

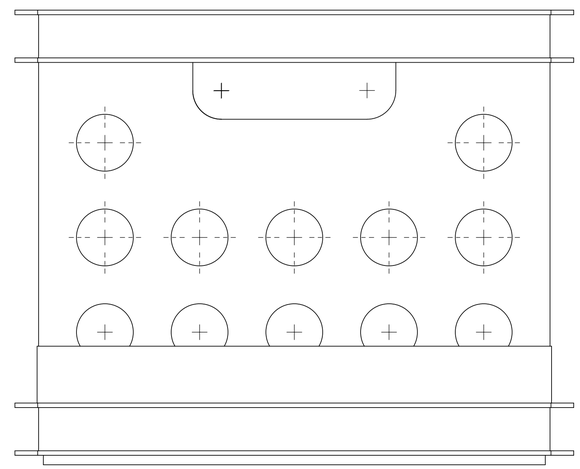

NOTE:
1. ALIGN TAPE F-2-B OR F-2-R ALONG BOTTOM LIP AS SHOWN.
2. WRAP GAFFERS TAPE AROUND ENTIRE CRATE.

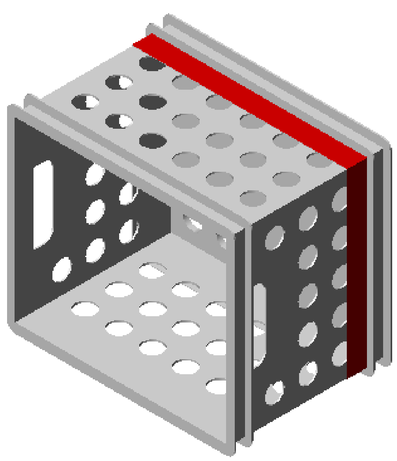

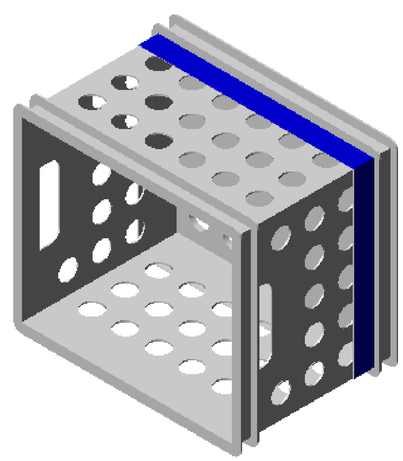

	NAME	DATE
DRAWN	PMR	8-2011
CHECKED		
ENG APPR.		
MFG APPR.		
Q.A.		

COMMENTS:

FIRST
200 Bedford Street, Manchester, N. H.03101
(603) 666-3906 - FAX (603) 666-3907

TITLE:
F: CRATE TAPING

SIZE	DWG. NO.	REV
D	FTC1201-1	-

SCALE:

ITEM NO.	DESCRIPTION	NOTES	QTY.
G-1	6 LB BOWLING BALL		2
G-2	1" GAFFERS TAPE	BLUE AND RED	AR

NOTES:
1. CREATE ONE BLUE AND ONE RED BOWLING BALL BY APPYLING TAPE G-2 AS SHOWN.

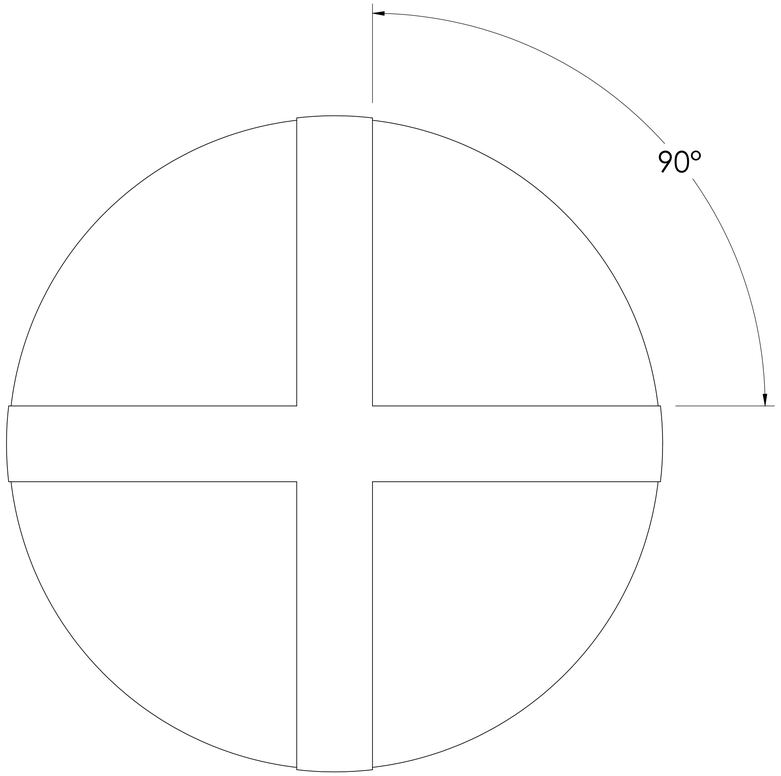

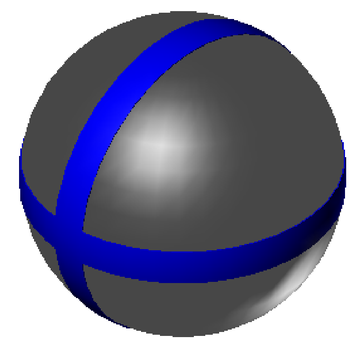

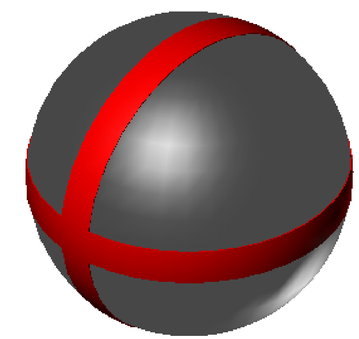

	NAME	DATE
DRAWN	PMR	8-2011
CHECKED		
ENG APPR.		
MFG APPR.		
Q.A.		
COMMENTS:		

FIRST
200 Bedford Street, Manchester, N. H 03101
(603) 666-3906 - FAX (603) 666-3907

TITLE: G: BOWLING BALL

SIZE	DWG. NO.	REV
D	FTC1201-1	-

SCALE: | SHEET 12 OF 13

ITEM NO.	DESCRIPTION	NOTES	QTY.
I-1-B	2" GAFFERS TAPE	BLUE	AR
I-1-R	2" GAFFERS TAPE	RED	AR
I-2	1" DIAMETER PVC PIPE	5' TALL - 1 PER ASSEMBLY	2

NOTE:
1. MAKE ONE STICK USING THE BLUE GAFFERS TAPE, I-1-B. MAKE THE OTHER STICK WITH RED GAFFERS TAPE, I-1-R.

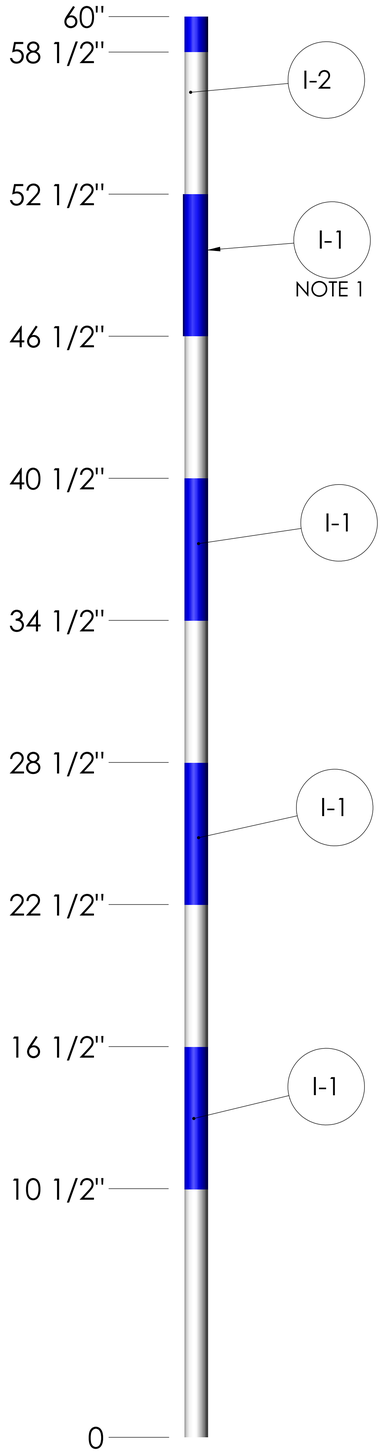

SCORING STICK TAPE APPLICATION DIMENSIONS

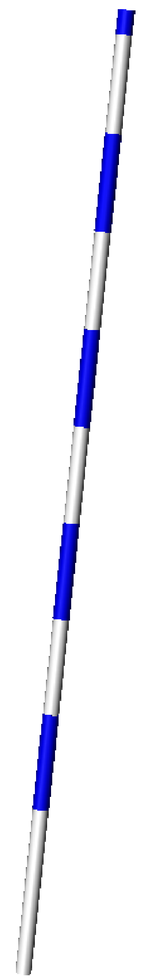

BLUE SCORING STICK

RED SCORING STICK

	NAME	DATE
DRAWN	PMR	8-2011
CHECKED		
ENG APPR.		
MFG APPR.		
Q.A.		
COMMENTS:		

FIRST
200 Bedford Street, Manchester, N. H.03101
(603) 666-3906 - FAX (603) 666-3907

TITLE: I: SCORING STACK STICK

SIZE D | DWG. NO. FTC1201-1 | REV -

SCALE: | SHEET 13 OF 13